24 (8x3) MT51060-IR (IR LED) bank
Vdrop Typ: 1.15V, Max: 1.40V
I @ VdropTyp: (12 - 3 * 1.15) / 88 = 97 mA
I @ VdropMax: (12 - 3 * 1.4) / 88 = 88 mA
Resistor string power: 0.097^2 * 88 = 830 mW
Net power draw (max): 8 * (12 * 0.097) = 9.3 W

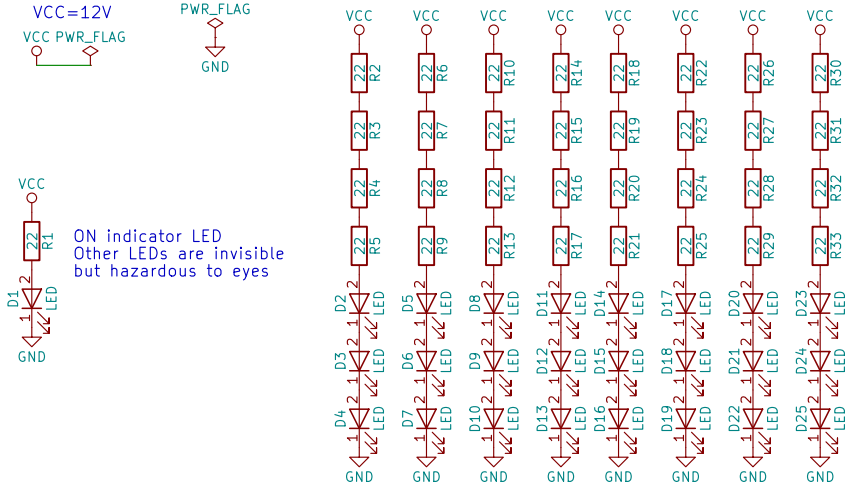

Sheet: /
File: ilr-r_r1.sch

Title: IR LED illuminator (R based), rev1

Size: A4	Date:	Rev:
KiCad E.D.A. kicad 4.0.7-e2-637658ubuntu16.04.1		Id: 1/1